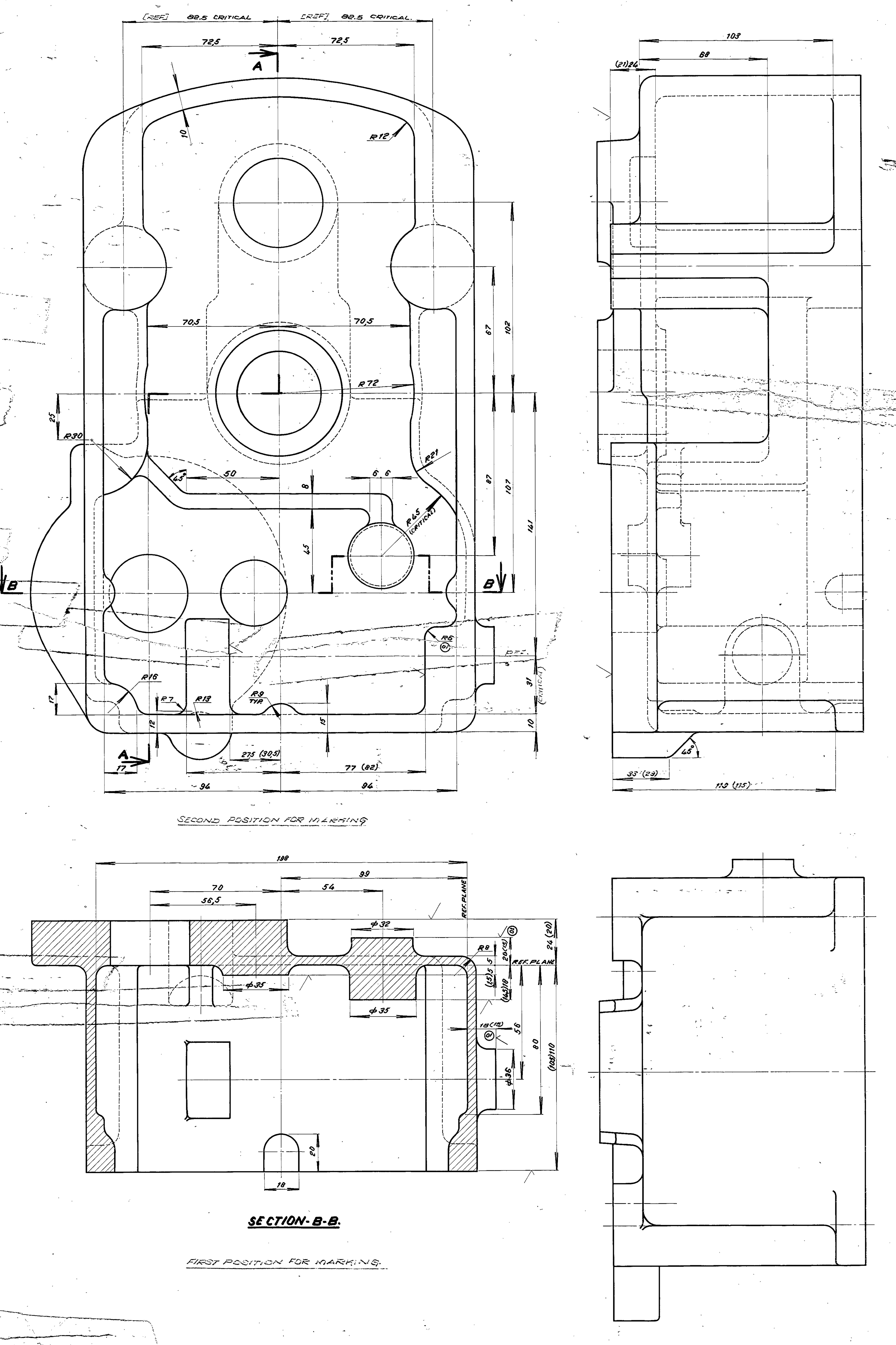

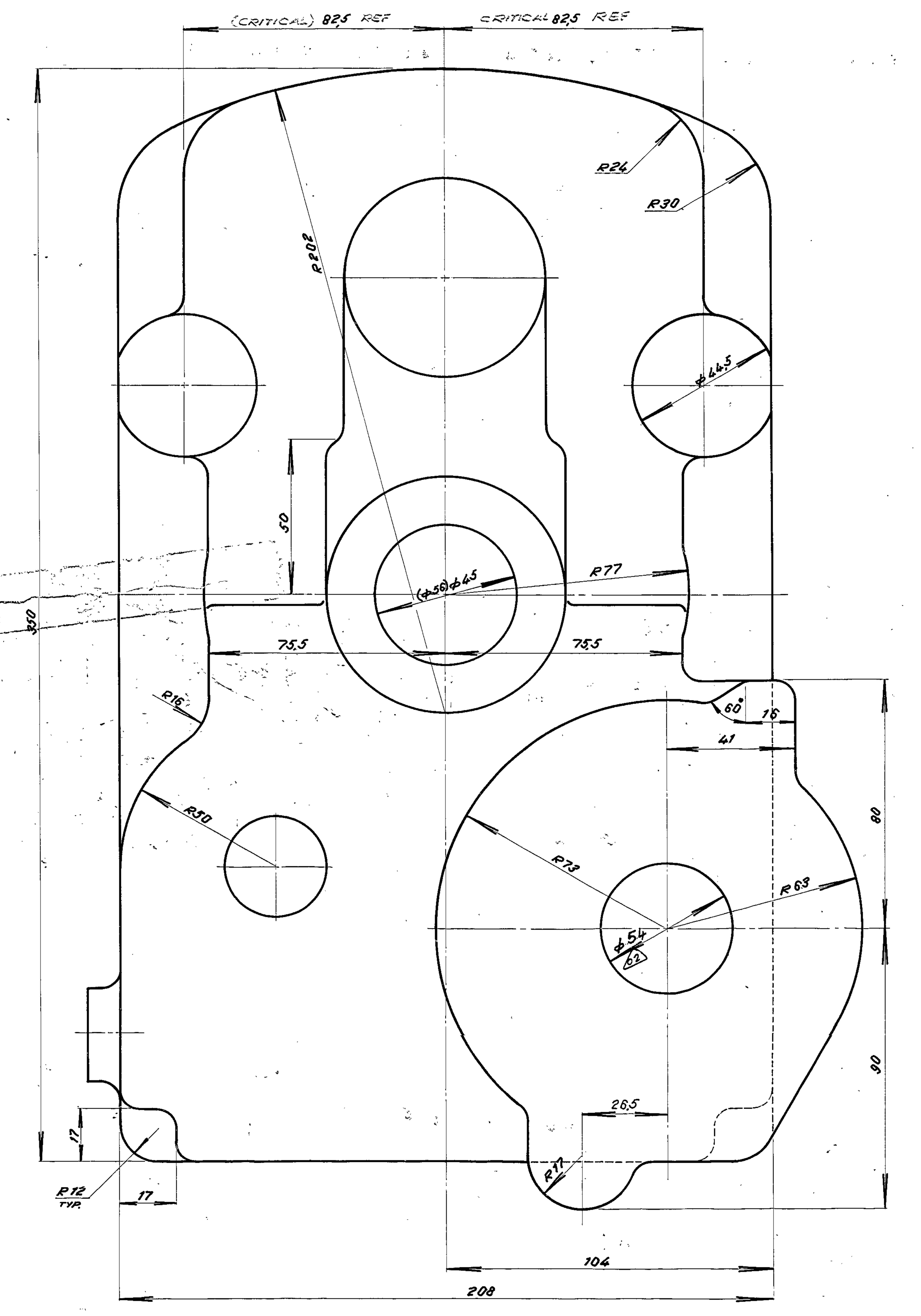

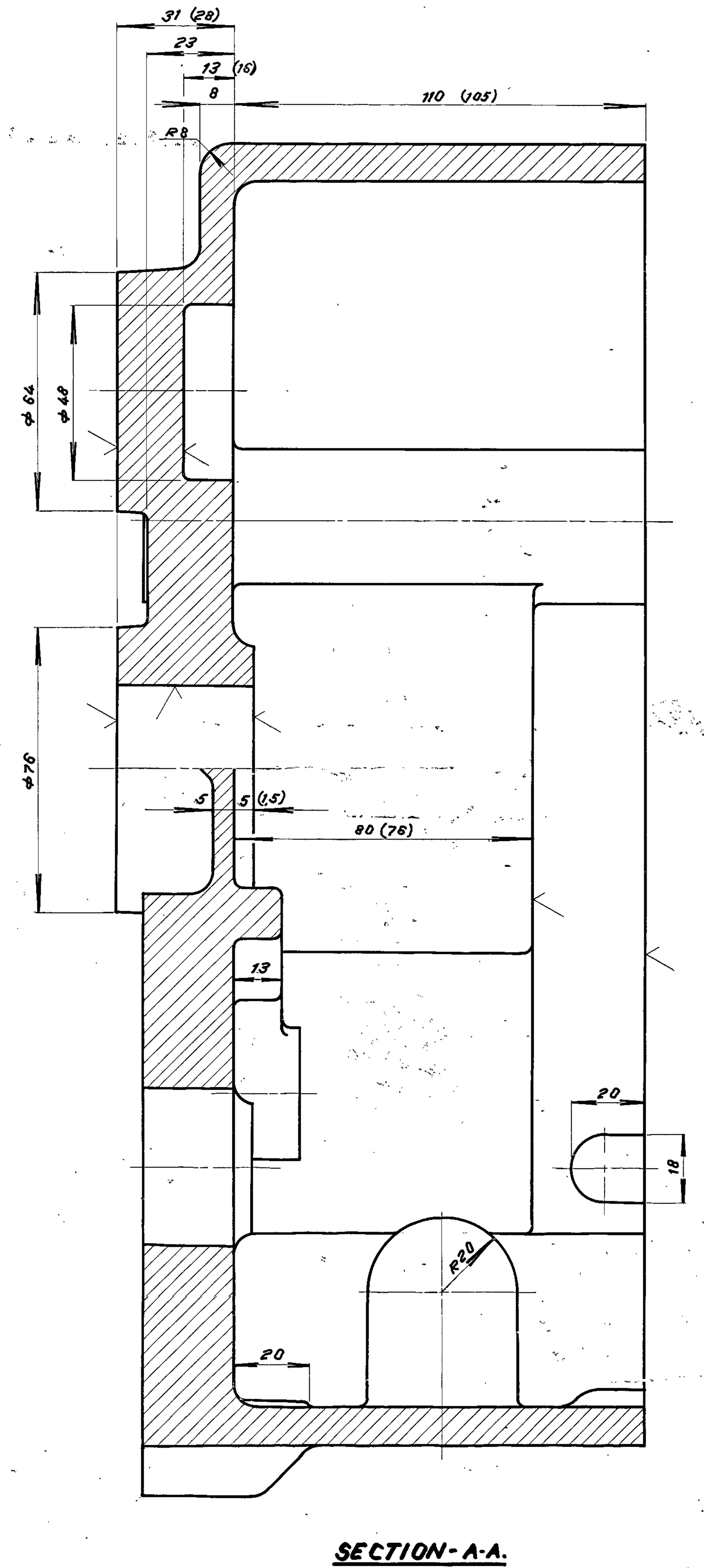

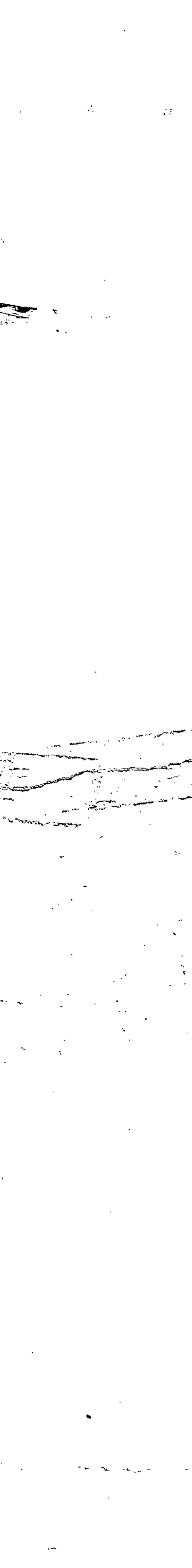

FOR MACHINE DRAWING REFER DRG. Nº 0-20. 201.00048

1. ✓ INDICATES THE SURFACES TO BE MACHINED FURTHER.
2. NECESSARY MACHINING ALLOWANCES ARE ALREADY INCLUDED IN THE INDICATED DIMENSIONS AND THE FINISH MACHINED DIMENSIONS ARE GIVEN IN BRACKETS FOR INFORMATION ONLY.
3. ~~DIMENSIONAL DEVIATIONS FOR CASTING IS TO BE STRICTLY AS PER TABLE IV (DEGREE OF ACCURACY 0.3) OF CSN-014470.~~
4. UNSPECIFIED CASTING RADII ARE TO BE 6mm. OR 3mm.
5. (03) MATERIAL STANDARD FOR CASTING TO BE ADHERED TO IS 617 DESGN 4635 T6 (SOLUTION HEAT TREATED & PRECIPITATION HARDENED)
   (03) ~~PROCESS : DIE CASTING~~
6. (03) TOLERANCE OF UNTOLERANCED DIMENSIONS SHOULD BE ±0.5%.

REV	DATE	ALTD.	REV	DATE	ALTD.	REV	DATE	ALTERED / CHECKED	REV	DATE	ALTERED / CHECKED
04	26/04/12	B. Sonowa / CH. SHRI	03	10.9.96	CH KOTESWARA / D. Hemaja	02	29.4.85	[illegible]	01	21.3.76	M.R. Oberoi
PROCESS DELETED			MATL. SPECN IS617 A-9WP AND AM LM9 CHANGED TO IS 617 DESGN 4635 T6. NOTE ADDED. NOTE 3 DELETED. DCN No: SB 1229			ZONE G6: DIMENSION φ54 WAS φ45. EC. Nº 759.			ZONE 12.G, 12.E, 12.D: RADIUS R8 INTRODUCED. M/C SYMBOL & DIMENSION ADDED.		
DCN: SB 1289											

STYLE No.	ITEM No.	BPS	REF. DRG./BPS No.	RVN	MATERIAL CODE / MATERIAL SPECN.	COMP. GROUP	UNIT Wt. (Kg)	No. OFF	BMI	DI	DESCRIPTION/ REMARKS
			(03)		92/005/789 / IS 617 DESGN 4635 T6	C / A					

CARD TYPE 1 — CARD TYPE 2

BILL OF MATERIAL No. 00391 398

BHARAT HEAVY ELECTRICALS LTD.,
BOILER PLANT UNIT, TIRUCHIRAPALLI – 620014.

FIRST ANGLE	SCALE: FULL SIZE	DRAWN	S. VISWANATHAN	TOTAL Wt. (Kg)
		CHECKED	A. DHARMALINGAM	TYPE
		APPROVED	R.S. MONIAM	
ALL DIMENSIONS IN MILLIMETRES		DATE		NEW/OLD DRG. No.

TITLE: **GEAR HOUSING CASTING**

CAUTION: THE INFORMATION CONTAINED IN THIS DRAWING IS THE PROPERTY OF BHARAT HEAVY ELECTRICALS LIMITED, BOILER PLANT UNIT, TIRUCHY-620014, AND SHALL NOT BE USED WITHOUT THEIR EXPRESS WRITTEN PERMISSION IN ANY FORM OR PART THEREOF FOR ANY OTHER PURPOSE THAN FOR WHICH IT IS SENT TO YOU.

CARD CODE: UO1 — DRAWING No. **0-20-201-00020** — REVISION 04

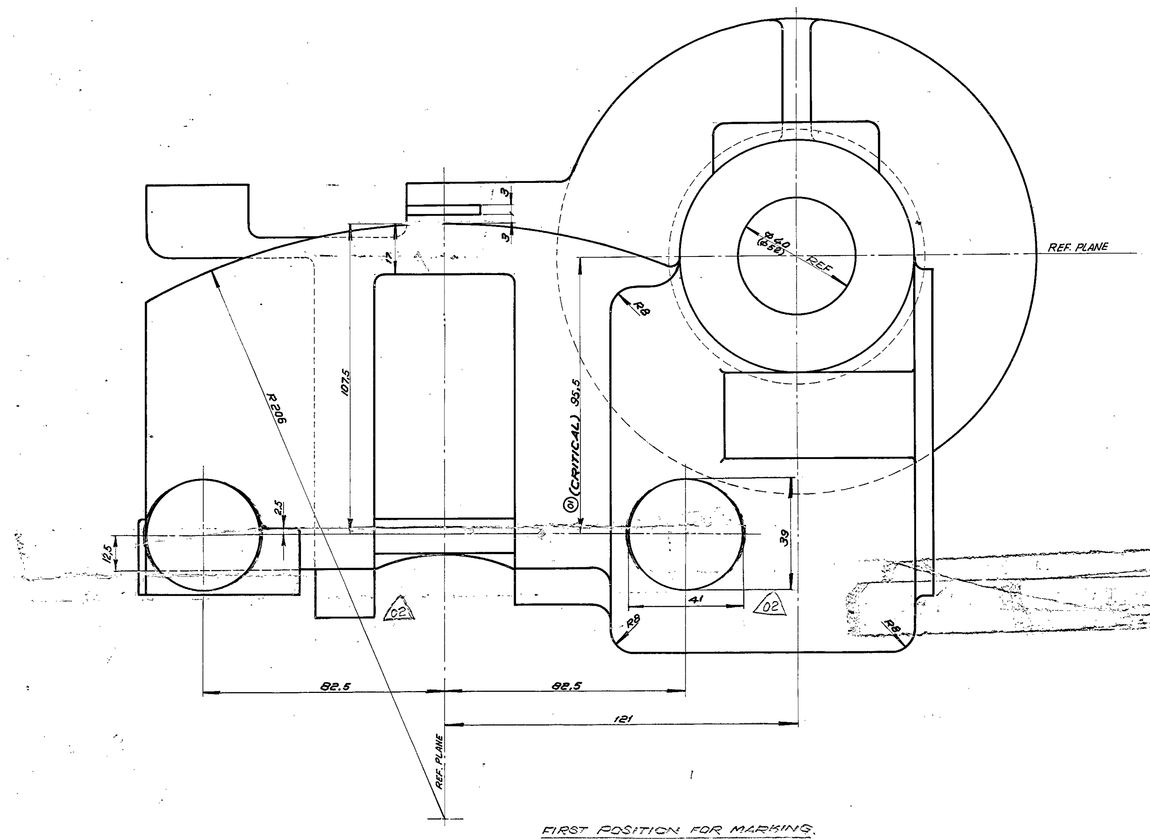

FIRST POSITION FOR MARKING.

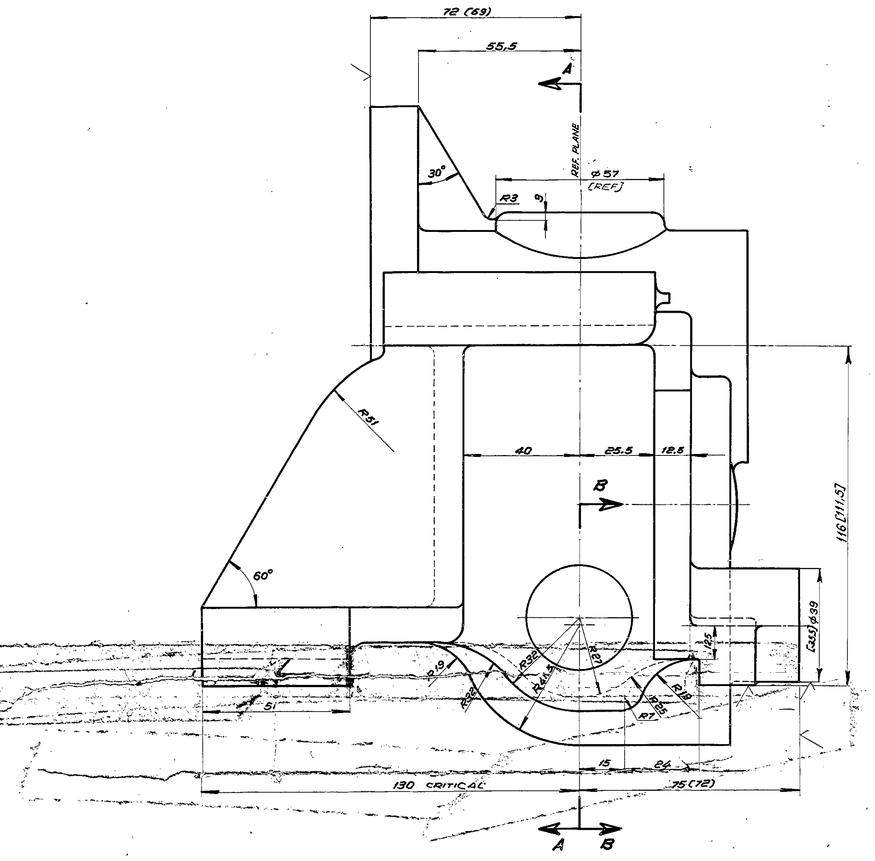

SECOND POSITION FOR MARKING

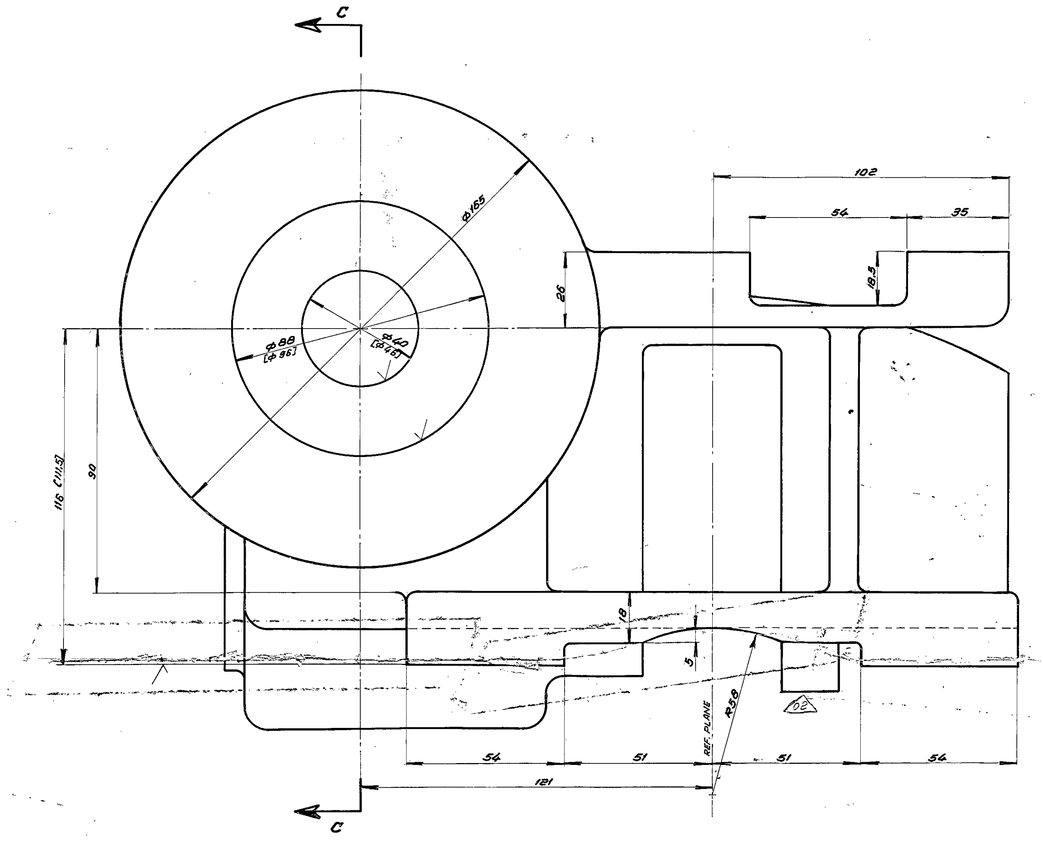

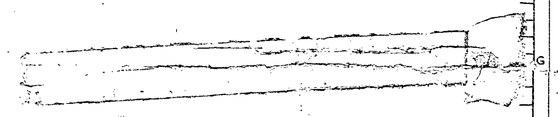

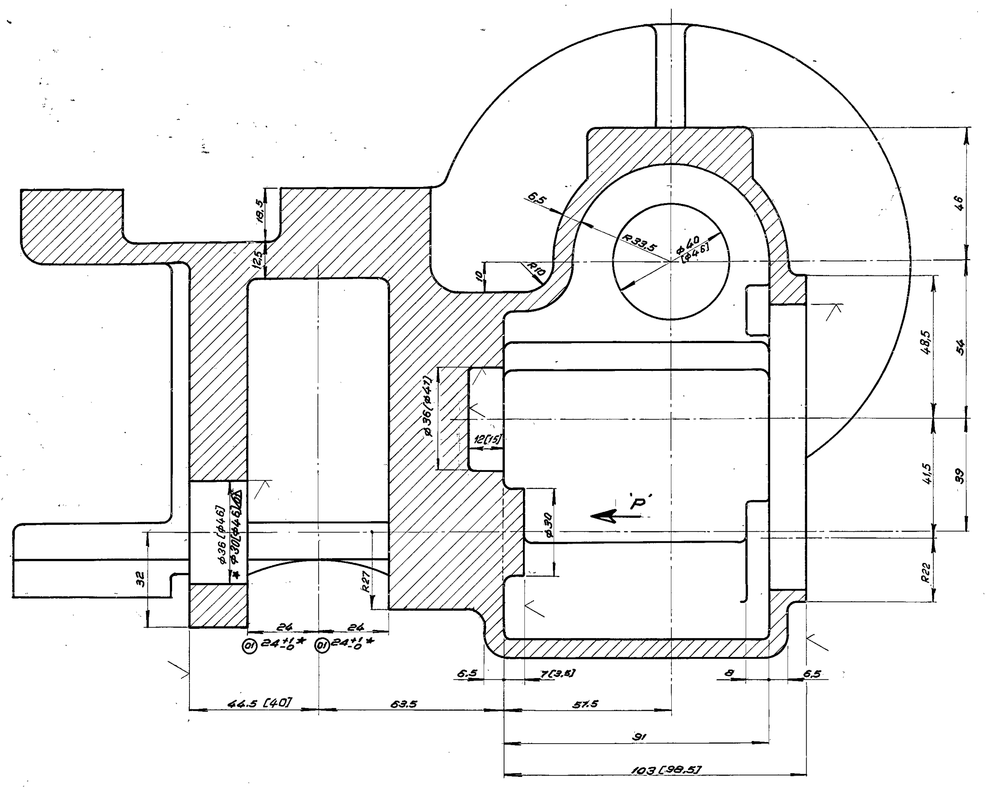

SECTION-AA

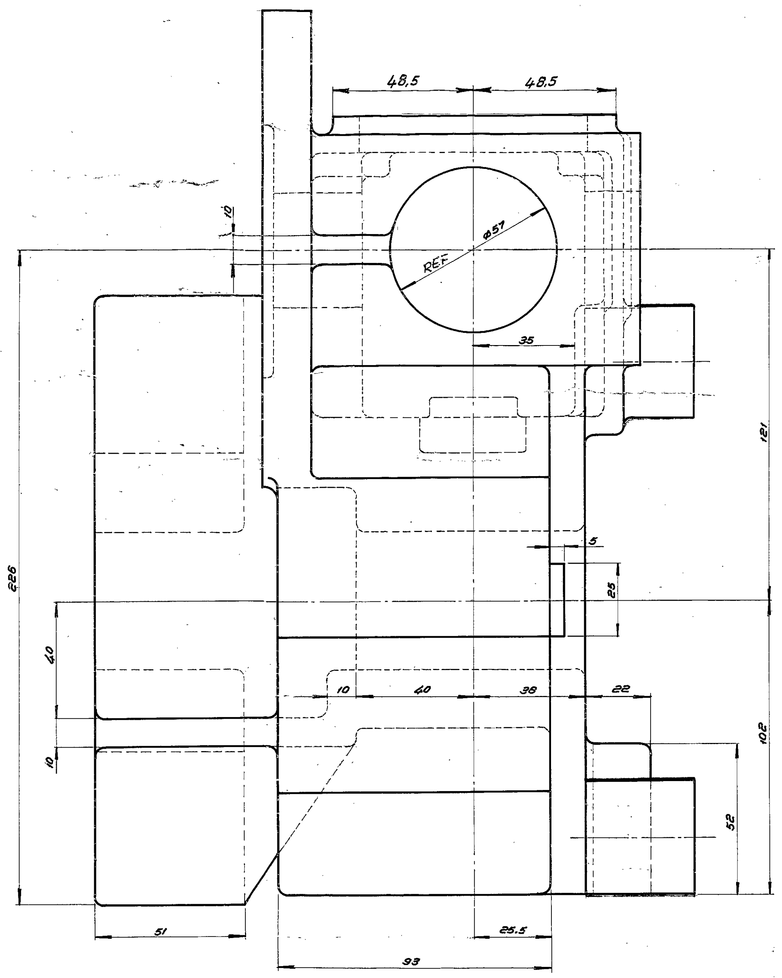

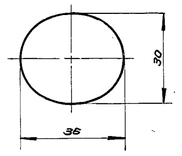

VIEW-'P'*

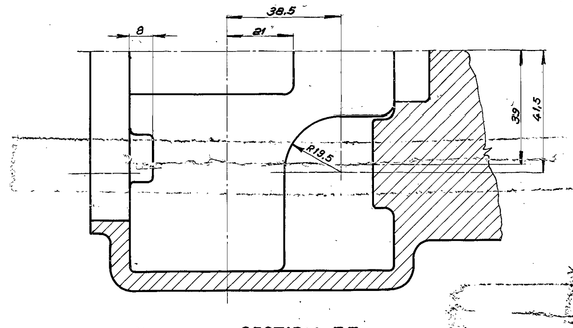

SECTION-BB

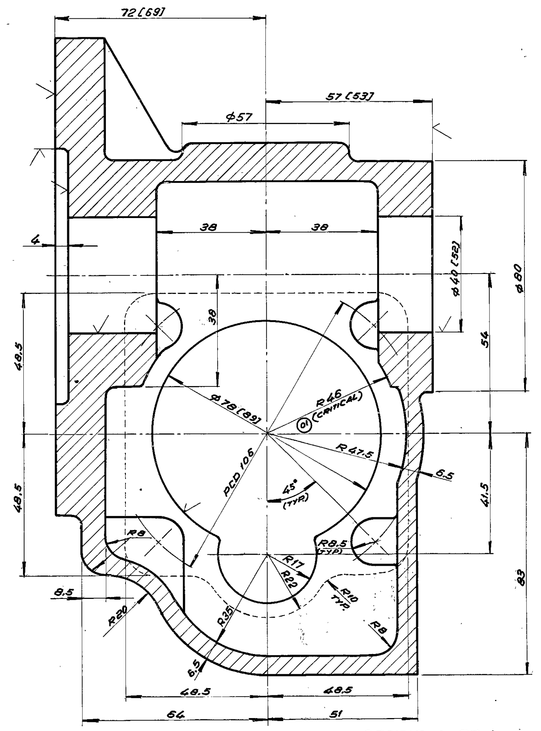

SECTION-CC

NOTE:-

1. √ INDICATES THE SURFACES TO BE MACHINED FURTHER.
2. NECESSARY MACHINING ALLOWANCES ARE ALREADY INCLUDED IN THE INDICATED DIMENSIONS AND THE FINISH MACHINED DIMENSIONS ARE GIVEN IN BRACKETS FOR INFORMATION ONLY.
3. ~~DIMENSIONAL DEVIATIONS FOR CASTING TO BE STRICTLY AS PER TABLE IV [DEGREE OF ACCURACY 0.3] OF CSN-014670.~~
4. UNSPECIFIED CASTING RADII TO BE 3mm. OR 6mm.
5. MATERIAL STANDARD FOR THE CASTING TO BE ADHERED TO IS 6IT. DESIGN-4685-T6 (SOLUTION HEAT TREATED & PRECIPITATION HARDENED).

FOR MACHINE DRAWING REFER DRG. NO. 0.20.201.00004.

(P) ★ ONLY FOR SAND CASTING.

~~(P) ★ : DIE CASTING~~

△ 6. TOLERANCE OF UNTOLERANCED DIMENSION SHOULD BE ±0.5/.

REV	DATE	ALTD. BY	CHKD. BY	PROCESS
04	24.04.78			PROCESS REMOVED.

DCN. 88. 1289

REV	DATE	ALTERED	CHECKED	PROCESS
03	10.7.78			MATL. SPECN. IS 6IT.4 BHP. BAND IC. IN 9 CHANGED TO IS 6IT DESGN. 4685-T6. NOTE ADDED. NOTE 3 DELETED. DCN NO: 88/1289
02	27.7.78	V. L. K.		ROUND BOSS ø 32 REMOVED TO 38×24. CHAMFER 6.5×25° ELIMINATED.
01	20.3.78			VIEW 'P' & SAND CASTING NOTE ADDED. ø 30 (ø 46) ADDED

ZONE	NOTE
C-14	VIEW 'P' & SAND CASTING NOTE ADDED. ø 30 (ø 46) ADDED

CARD CODE	DRAWING No.	REVISION
U01	0.20.201.00021	04

- 92/0081/700 — 8.04
- 6 IT. DESIGN 4685-T6

REV	REF. DRG./BPS No.	MATERIAL CODE / MATERIAL SPECN.	COMP. GROUP	UNIT WT. (KG) / No. OFF	DESCRIPTION / REMARKS

CARD TYPE 1 — CARD TYPE 2

BILL OF MATERIAL No.

CONTROLLED BY TCDD
FORM 00391 (FORMAT 3051)

BHARAT HEAVY ELECTRICALS LTD.,
BOILER PLANT UNIT, TIRUCHIRAPALLI – 620014.

FIRST ANGLE	SCALE: FULL SIZE	DRAWN: T. Ramamurthy	TOTAL WT. (KG): 40.00
		CHECKED:	TYPE:
		APPROVED:	
ALL DIMENSIONS IN MILLIMETRES	DATE:	2nd. REPRODS.	HEAVOLD DRG. No.

TITLE: RACK GEAR HOUSING CASTING

CAUTION: This drawing has been in use (previously as DRG. No. 0.20.201.00004) BHARAT HEAVY ELECTRICALS LIMITED, BOILER PLANT UNIT, TIRUCHIRAPALLI-620014, and shall not be used without their express written permission in any form or part thereof for any other purpose than for which it is sent to you.

BHEL-13/A

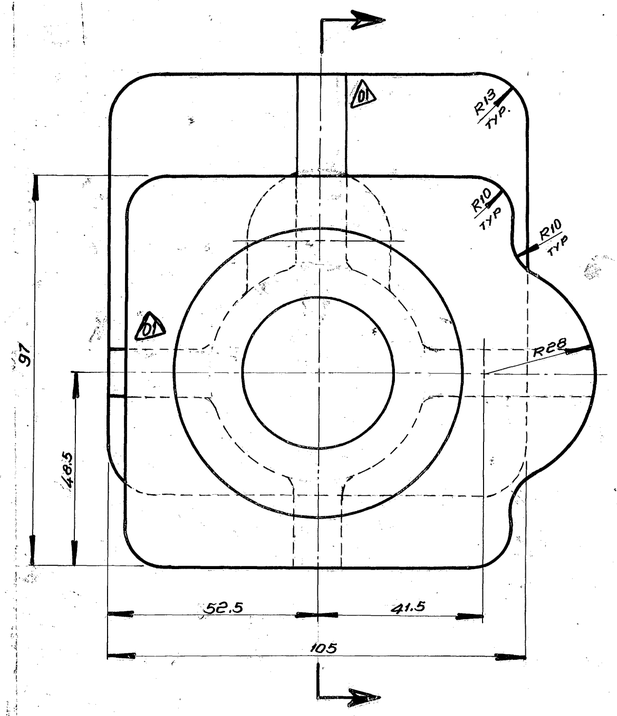

FIRST POSITION FOR MARKING

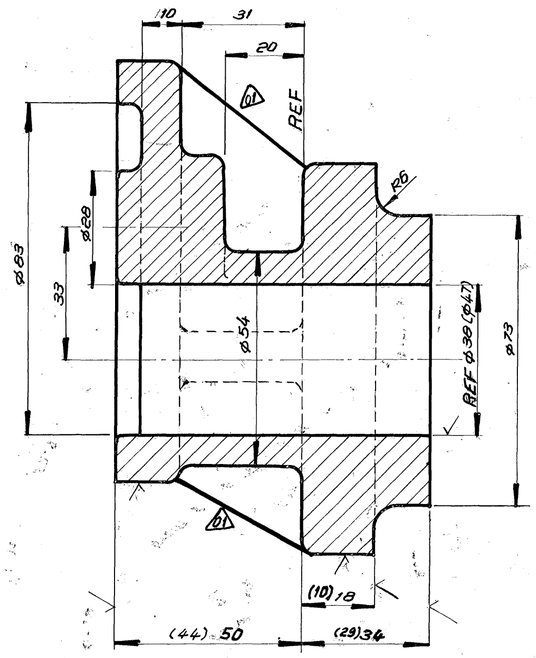

SECOND POSITION FOR MARKING

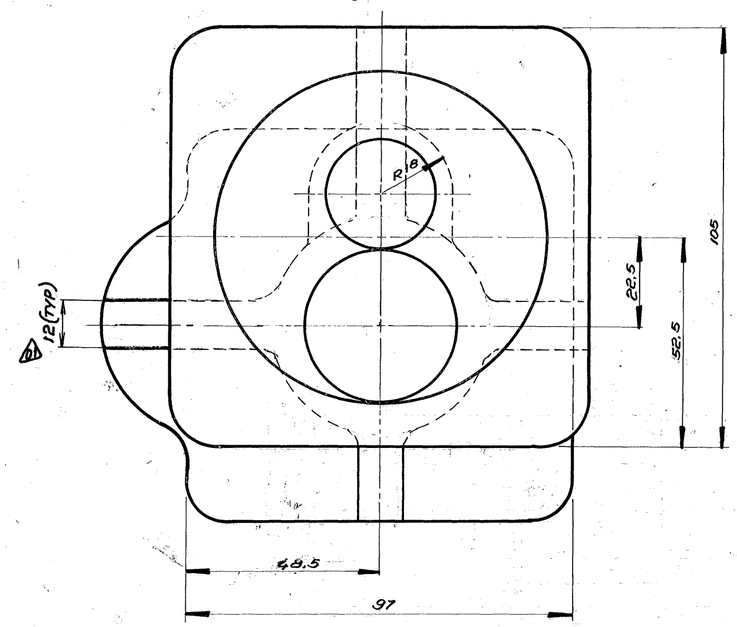

NOTE :-

1. √ INDICATES THE SURFACES TO BE MACHINED FURTHER.
2. NECESSARY MACHINING ALLOWANCES ARE ALREADY INCLUDED IN THE INDICATED DIMENSIONS AND THE FINISH MACHINED DIMENSIONS ARE GIVEN IN BRACKETS FOR INFORMATION ONLY.
3. DIMENSIONAL DEVIATIONS FOR CASTING TO BE STRICTLY AS PER THE QUALITY DOCUMENTS FOR STEEL CASTING (02)
4. UNSPECIFIED CASTING RADII TO BE 3 mm.
5. MATERIAL STANDARD FOR THE CASTING TO BE ADHERED TO LM-9WP. (SOLUTION TREATED & PRECIPITATION HARDENED. (02)

FOR MACHINE DRAWING REFER DRG. NO. 2.20.201.00061

							92/005/791				1.25				
							ALU. LM9WP								
STYLE No.	ITEM	ITEM No.	BPS	REF. DRG./BPS No.	RVN	MATERIAL CODE		AC	COMP. GROUP	UNIT wt. (kg)		BM	DI	DESCRIPTION/ REMARKS	
					STL	MATERIAL SPECN.				No. OFF					
19				CARD TYPE 1										19 CARD TYPE 2	

BILL OF MATERIAL No.

BOM

MICROFILMED ON 29.2.88 ROLL 0039 FRAME 1112

BHARAT HEAVY ELECTRICALS LTD.,

BOILER PLANT UNIT, TIRUCHIRAPALLI - 620014.

FIRST ANGLE	SCALE 1:1	DRAWN	V. S. Ganesan	TOTAL wt. (kg)	1.25
		CHECKED		TYPE	
		APPROVED			
ALL DIMENSIONS IN MILLIMETRES		DATE	12.2.76	NEW/OLD DRG. No.	

TITLE: SWITCH MOUNT CONNECTOR CASTING

CARD CODE	DRAWING No.	REVISION
U01	2.20.201.00116	02

CAUTION

THE INFORMATION CONTAINED IN THIS DRAWING IS THE PROPERTY OF BHARAT HEAVY ELECTRICALS LIMITED., BOILER PLANT UNIT, TIRUCHY-620014. AND SHALL NOT BE USED WITHOUT THEIR EXPRESS WRITTEN PERMISSION IN ANY FORM OR PART THEREOF FOR ANY OTHER PURPOSE THAN FOR WHICH IT IS SENT TO YOU.

05.228/A

REV	DATE	ALTD:	
02	13.04.01	CHKD & APPD	

NOTE ALTERED. PROCESS REMOVED

DCN NO: 98 1297.

01	DATE 17-6-78	ALTERED	NG
		CHECKED	
ZONE 197	12 m.m STIFFENER ON FOUR SIDES ADDED FOR REIN-FORCEMENT		

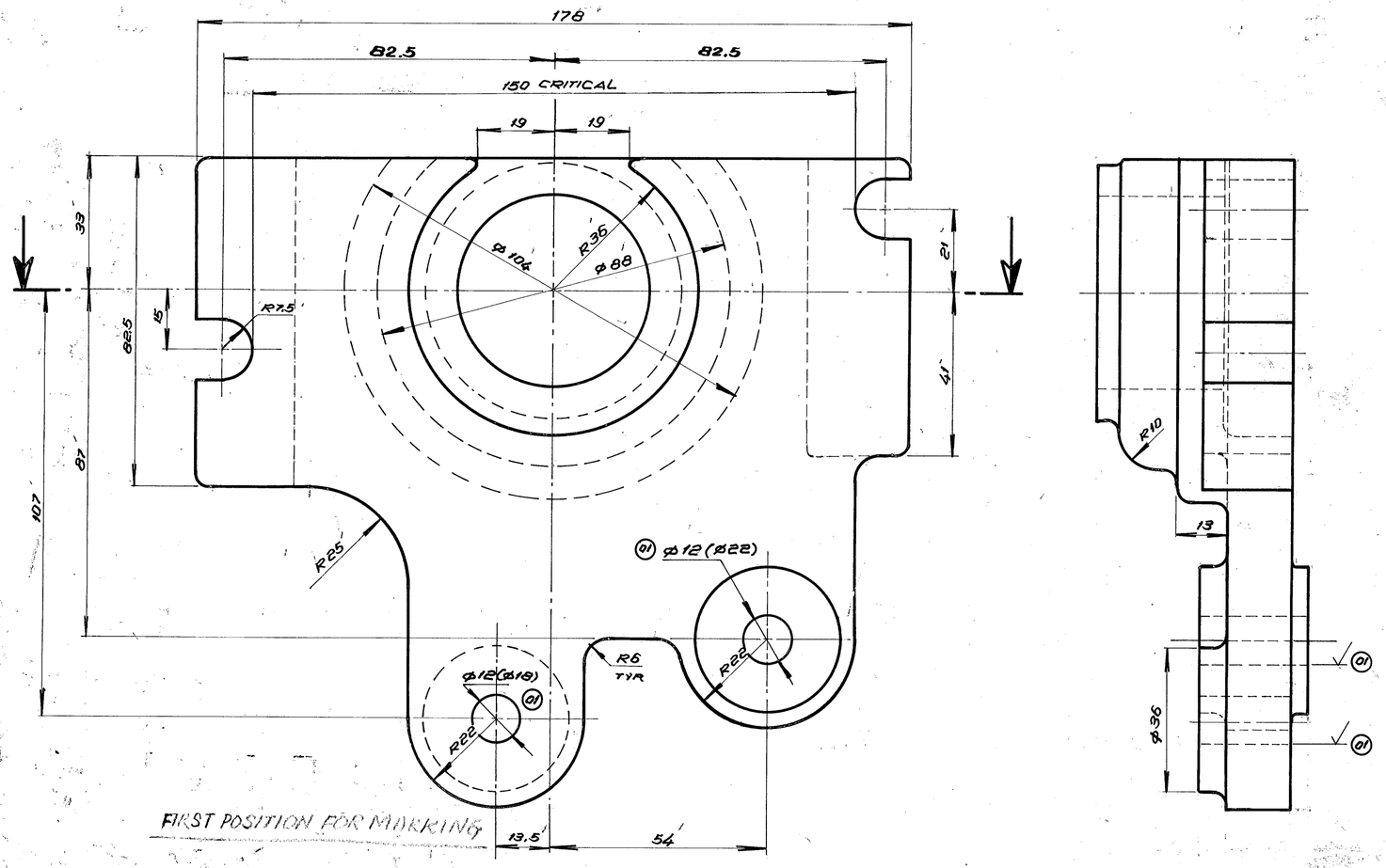

NOTE:-

1. √ INDICATES THE SURFACES TO BE MACHINED FURTHER.
2. NECESSARY MACHINING ALLOWANCES ARE ALREADY INCLUDED IN THE INDICATED DIMENSIONS AND THE FINISH MACHINED DIMENSIONS ARE GIVEN IN BRACKETS FOR INFORMATION ONLY.
3. DIMENSIONAL DEVIATIONS FOR CASTING TO BE STRICTLY AS PER TABLE THE QUALITY DOCUMENTS FOR STEEL CASTING
4. UNSPECIFIED CASTING RADII TO BE 3mm. MAX.
5. MATERIAL STANDARD FOR THE CASTING TO BE ADHERED TO LM-9WP. [SOLUTION TREATED & PRECIPITATION HARDENED]

FOR MACHINE DRAWING REFER DRG. NO. 2.20-201.00059.

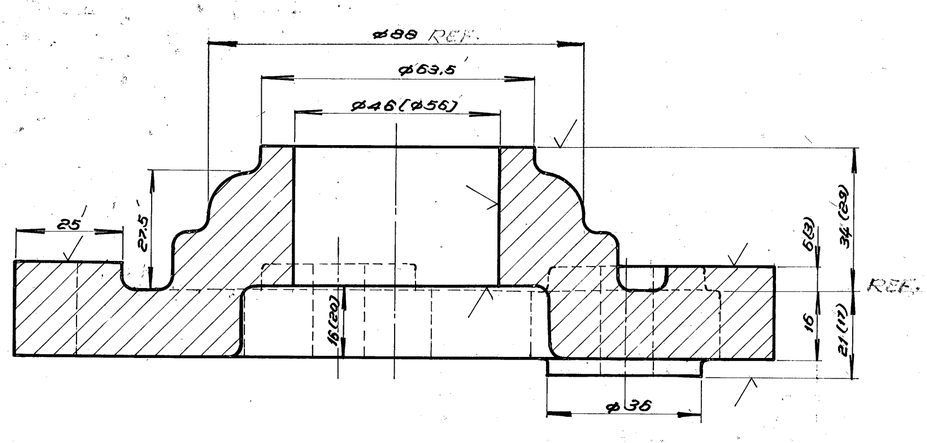

SECOND POSITION FOR MARKING

						92/026/042				1.30		
						ALU. LM9.WP						
15 STYLE NO.	17 ITEM NO.	20 BPS	21 REF. DRG./ BPS No.	RVN / STL	34 MATERIAL CODE / 44 MATERIAL SPECN.	56 A / C	57 COMP. GROUP	63 UNIT WT.(Kg.) / 70 No. OFF	68	75 BM1	76 DI	20 DESCRIPTION / REMARKS
19 CARD TYPE 1												19 CARD TYPE 2

BILL OF MATERIAL NO.

BOM

MICROFILMED 29.9.83 ROLL 01038 FRAME 1111

BHARAT HEAVY ELECTRICALS LTD.,

BOILER PLANT UNIT, TIRUCHIRAPALLI-620014

FIRST ANGLE	SCALE 1:1	DRAWN	Sri. LAKSHMIKANTHAN	TOTAL WT. (Kg.)	1.30
		CHECKED		TYPE	
		APPROVED			
ALL DIMENSIONS IN MILLIMETRES		DATE	18TH FEB. 1976.	NEW / OLD DRG. No.	

CAUTION
THE INFORMATION CONTAINED IN THIS DRAWING IS THE PROPERTY OF BHARAT HEAVY ELECTRICALS LIMITED BOILER PLANT UNIT, TIRUCHY - 620 014 AND SHALL NOT BE USED WITHOUT THEIR EXPRESS WRITTEN PERMISSION IN ANY FORM OR PART THEREOF FOR ANY OTHER PURPOSE THAN FOR WHICH IT IS SENT TO YOU.

TIRUCHIRAPALLI

05-228.

TITLE

BEARING FRAME CASTING

CARD CODE	DRAWING No.	REVISION
U01	2.20.201.00117	02

REV	DATE					
02	13.04.01	ALTD: CHKD & APD:	01	DATE 20.3.76	ALTERED / CHECKED	
NOTE ALTERED - PROCESS REMOVED			ZONE	CORED HOLE ø12 INCLUDED M/C SYMBOL ADDED.		

DCN NO SB: 1297

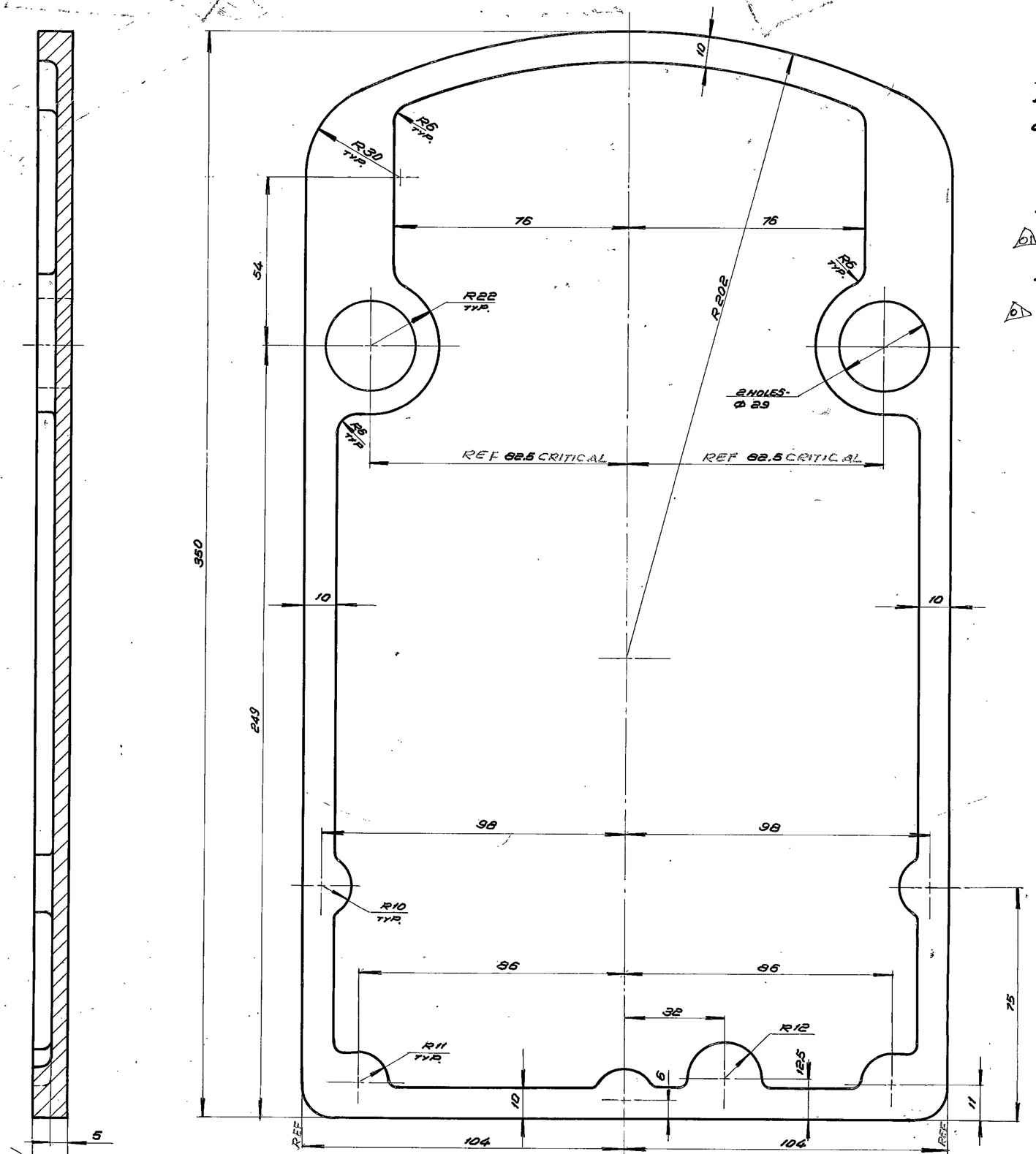

NOTE:-

1. √ INDICATES THE SURFACES TO BE MACHINED FURTHER.
2. NECESSARY MACHINING ALLOWANCES ARE ALREADY INCLUDED IN THE INDICATED DIMENSIONS AND THE FINISH MACHINED DIMENSIONS ARE GIVEN IN BRACKETS FOR INFORMATION ONLY.
3. DIMENSIONAL DEVIATIONS FOR CASTING TO BE STRICTLY AS PER THE QUALITY DOCUMENTS FOR STEEL CASTING.
4. UNSPECIFIED CASTING RADII TO BE 3MM. MAX.
5. MATERIAL STANDARD FOR THE CASTING TO BE ADHERED TO L.M. 6.
6. WARPING TO BE RESTRICTED TO 0.5MM.

FOR MACHINE DRAWING REFER DRG. NO. 2.20-201. 00060.

STYLE No.	ITEM No.	BPS	REF. DRG./BPS No.	RVN / STL	MATERIAL CODE / MATERIAL SPECN.	A / C	COMP. GROUP	UNIT wt. (kg) / No. OFF	BM / DI	DESCRIPTION/ REMARKS
					92/005/792			1.20		
					ALU.LM-6					

CARD TYPE 1 — CARD TYPE 2

BILL OF MATERIAL No.

BOM

MICROFILMED ROLL 0039 FRAME 1104

BHARAT HEAVY ELECTRICALS LTD.,
BOILER PLANT UNIT, TIRUCHIRAPALLI-620014.

FIRST ANGLE	SCALE 1:1	DRAWN	CH. RAKSHMIKANTHAN	TOTAL wt. (kg)	1.20
		CHECKED		TYPE	
		APPROVED	N Ravindra		
ALL DIMENSIONS IN MILLIMETRES		DATE	22nd MARCH. 1976	NEW/OLD DRG. No.	

ZONE	DATE	ALTERED
01	13.1.80	NOTE ALTERED. DCN NO. SB 1297

CAUTION

THE INFORMATION CONTAINED IN THIS DRAWING IS THE PROPERTY OF BHARAT HEAVY ELECTRICALS LIMITED., BOILER PLANT UNIT, TIRUCHY-620 014. AND SHALL NOT BE USED WITHOUT THEIR EXPRESS WRITTEN PERMISSION IN ANY FORM OR PART THEREOF FOR ANY OTHER PURPOSE THAN FOR WHICH IT IS SENT TO YOU.

05-228/A

TITLE: GEAR BOX COVER CASTING.

CARD CODE	DRAWING No.	REVISION
U01	2.20-201.00124	01

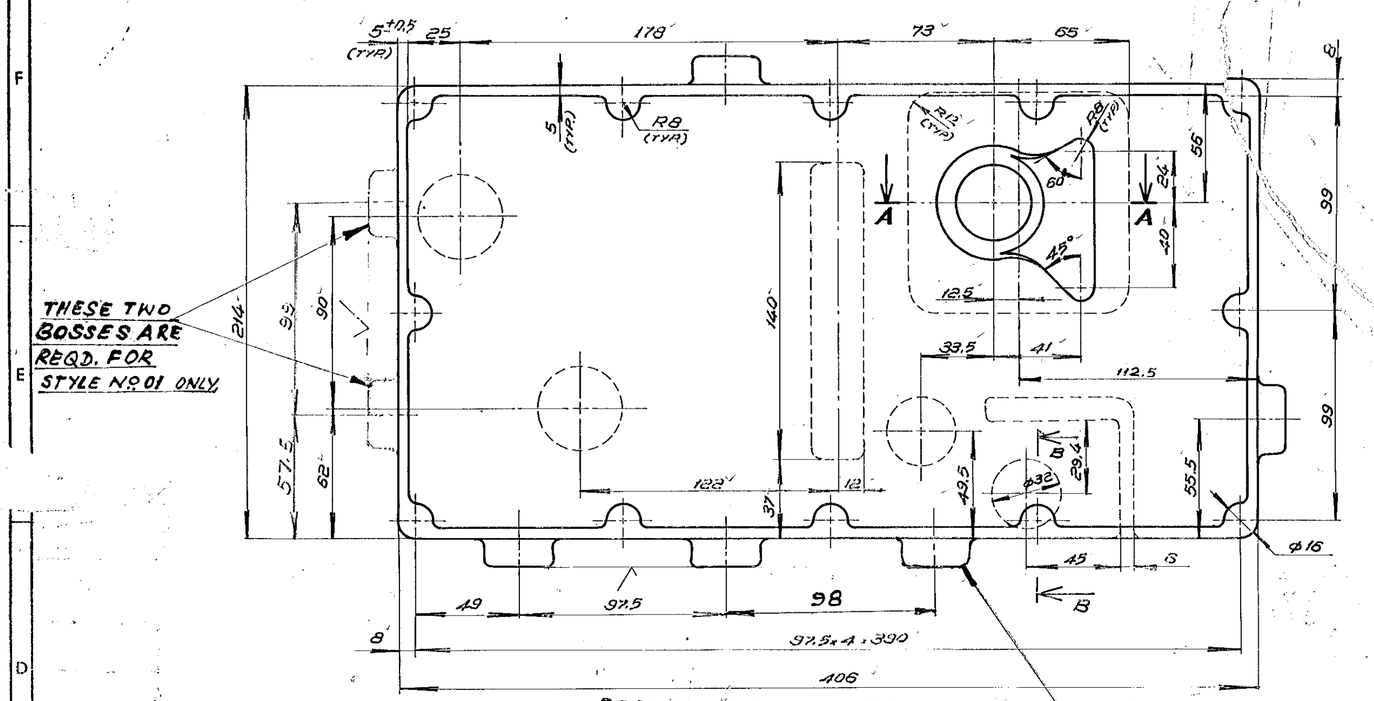

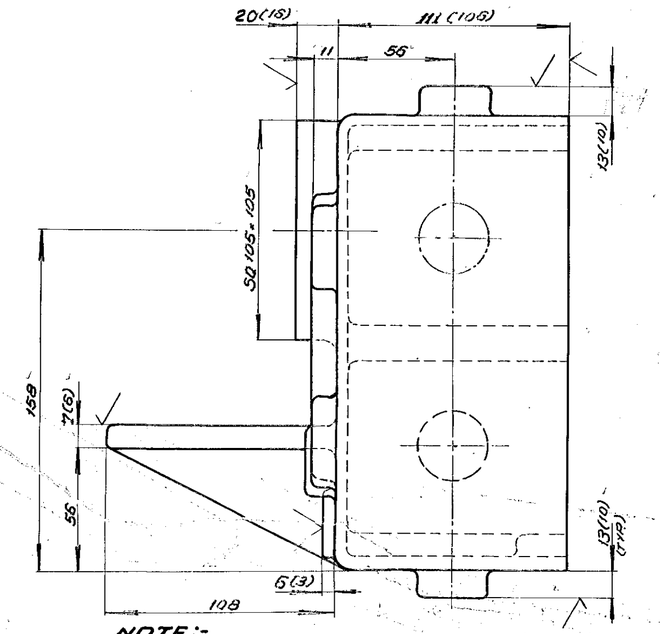

NOTE:-

1. √ INDICATES THE SURFACES TO BE MACHINED FURTHER.
2. NECESSARY MACHINING ALLOWANCES ARE ALREADY INCLUDED IN THE INDICATED DIMENSIONS AND THE FINISH MACHINED DIMENSIONS ARE GIVEN IN BRACKETS FOR INFORMATION ONLY.
3. DIMENSIONAL DEVIATIONS FOR CASTING TO BE STRICTLY AS PER THE QUALITY DOCUMENTS FOR STEEL CASTING. (06)
4. UNSPECIFIED CASTING RADII TO BE 3mm MAX
5. MATERIAL STANDARD FOR THE CASTING TO BE ADHERED TO LM-9WP (SOLUTION HEAT TREATED & PRECIPITATION HARDENED.) (06)

FOR MACHINE DRAWING REFER DRG.NO. 2.20.201.00289/357

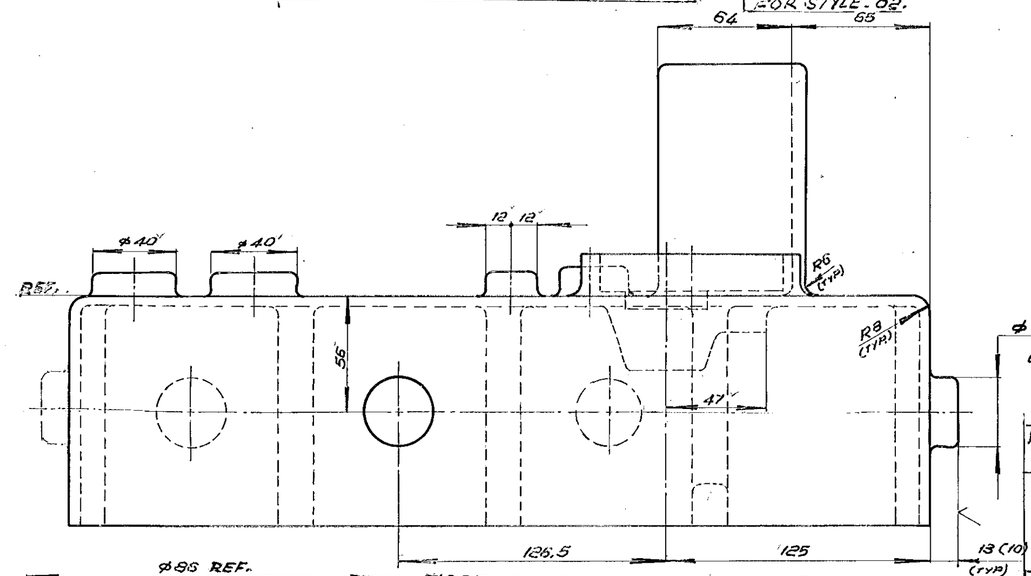

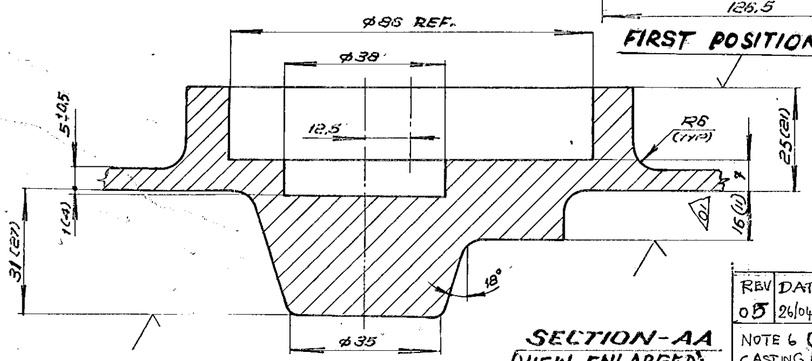

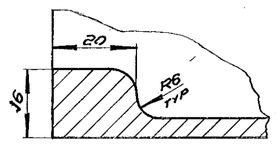

REV	DATE	ALTD:	CHKD & APPD:
06	13.04.01		

NOTE ALTERED.

DCN NO: SB1297

	DATE	ALTERED	CHECKED
04	25.10.85		

ZONE E7 F7 & D6. 2 BOSS ϕ40 FROM THE LEFT SIDE REMOVED, ONE BOSS ϕ40 IN BOTTOM NEWLY ADDED. MADE IT AS STYLE 2 & OLD DESIGN RETAINED AS STYLE-01. EC-178.

	DATE	ALTERED	CHECKED
03	13.7.81		

ZONE MATL CODE 16-006-337 WAS 32-005-793. M/C DRG 2-20-201-00289 ADDED. E.C.No. 531

	DATE	ALTERED	CHECKED
01	9-11-79		

ZONE 335 DIM 16(11) WAS 11. SINCE MACHINING ALLOWANCE ADDED.

REV	DATE	ALTD:	CHKD & APPD:
05	26/04/82		

NOTE 6 (PROCESS: DIE CASTING) DELETED.

DCN. No. SB: 1289

	DATE	ALTERED	CHECKED
02	30.01.81		

ZONE ϕ40 WAS 32

EC.No. 472

STYLE No.	TRM TRG	BPS	REF. DRG./BPS No.	RVN / 32 STL	MATERIAL CODE / MATERIAL SPECN.	A / C	COMP. GROUP	UNIT wt. (kg)	No. OFF	BMI	D	DESCRIPTION/ REMARKS
02					16 024 016 ALU. LM9 WP			1				
01					16-006-337 ALU. LM9 WP			5.00				

CARD TYPE 1 — CARD TYPE 2

BILL OF MATERIAL No.

BOM

00391 087

BHARAT HEAVY ELECTRICALS LTD.,

BOILER PLANT UNIT, TIRUCHIRAPALLI-620014.

FIRST ANGLE	SCALE	DRAWN	M. RAMASWAMI RAMAYAN	TOTAL wt. (kg)	~5.00
		CHECKED		TYPE	
		APPROVED			
ALL DIMENSIONS IN MILLIMETRES		DATE	13TH JUNE 1978	NEW/OLD DRG. No.	

CAUTION

THE INFORMATION CONTAINED IN THIS DRAWING IS THE PROPERTY OF BHARAT HEAVY ELECTRICALS LIMITED., BOILER PLANT UNIT, TIRUCHY-620 014. AND SHALL NOT BE USED WITHOUT THEIR EXPRESS WRITTEN PERMISSION IN ANY FORM OR PART THEREOF FOR ANY OTHER PURPOSE THAN FOR WHICH IT IS SENT TO YOU.

05-228/A

TITLE: LIMIT SWITCH MOUNT CASTING

CARD CODE	DRAWING No.	REVISION
U01	2-20-201-00142	06

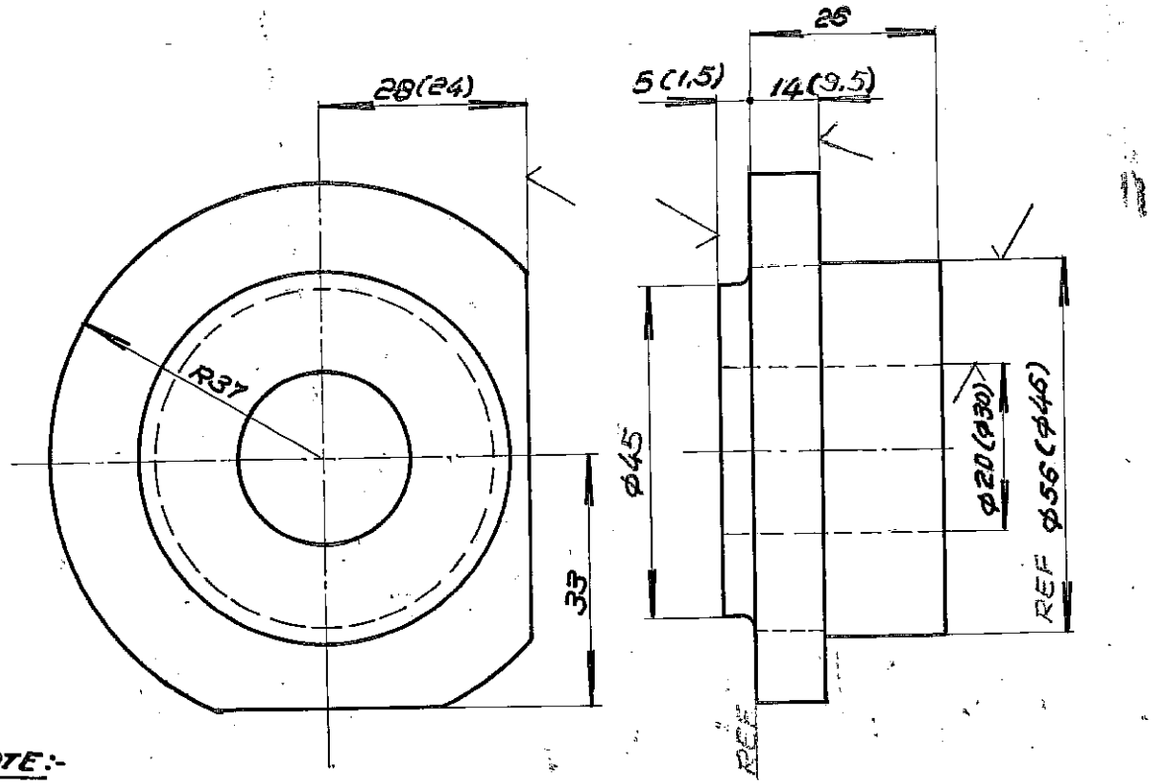

NOTE:-

1. √ INDICATES THE SURFACES TO BE MACHINED FURTHER.
2. NECESSARY MACHINING ALLOWANCES ARE ALREADY INCLUDED IN THE INDICATED DIMENSIONS AND THE FINISH MACHINED DIMENSIONS ARE GIVEN IN BRACKETS FOR INFORMATION ONLY
3. DIMENSIONAL DEVIATIONS FOR CASTING TO BE STRICTLY AS PER THE QUALITY DOCUMENTS FOR STEEL CASTING
4. UNSPECIFIED CASTING RADII TO BE 1.5 mm MAX.
5. MATERIAL STANDARD FOR THE CASTING TO BE ADHERED TO LM-9 WP. [SOLUTION HEAT TREATED & PRECIPITATION HARDENED
6. FOR MACHINE DRAWING REFER DRAWING No. 4.20.201-00209.

MICROFILMED ON ROLL 00383 FRAME 258

STYLE No.	ITEM No.	BPS	REF. DRG./BPS No.	RVN / STL	MATERIAL CODE / MATERIAL SPECN.	A / C	COMP. GROUP	UNIT wt. (kg.) / No. OFF	BMI	DI	DESCRIPTION/ REMARKS
					92/005/790			20			
					LM-9 WP						

CARD TYPE 1 — CARD TYPE 2

BILL OF MATERIAL No.

FIRST ANGLE	SCALE	DRAWN: V. L. Vandhan.	TOTAL wt. (kg.): 0.2
		CHECKED:	TYPE:
		APPROVED:	
ALL DIMENSIONS IN MILLIMETRES		DATE:	NEW/OLD DRG. No.

CAUTION

THE INFORMATION CONTAINED IN THIS DRAWING IS THE PROPERTY OF BHARAT HEAVY ELECTRICALS LIMITED., BOILER PLANT UNIT, TIRUCHY-620 014. AND SHALL NOT BE USED WITHOUT THEIR EXPRESS WRITTEN PERMISSION IN ANY FORM OR PART THEREOF FOR ANY OTHER PURPOSE THAN FOR WHICH IT IS SENT TO YOU.

05-249

TITLE: BEARING CAP CASTING

CARD CODE	DRAWING No.	REVISION
U01	4-20-201-00736	01

REV	DATE	CHKD	APPD
01	13.04.01		

NOTE ALTERED. PROCESS REMOVED DCN NO SB/297

CORPORATE DRG ID TP-DG-4-20-201-00736

CORPORATE DRG ID TP-DG-4-20-201-00736